Basic circuits

Using schematic symbols as building blocks, you can construct a functional diagram showing piping arragnements and operation of any hydraulic or pneumatic circuit.

A number of circuits are used frequently in fluid power systems to perform useful functions. For example, metering circuits offer precise control of actuator speed without a lot of complicated electronics, decompression circuits reduce pressure surges within a hydraulic system by controlling the release of stored fluid energy, and pump-unloading and regenerative circuits make a system more energy efficient. Other circuits are designed for safety, sequencing of operations, and for controlling force, torque, and position. Still other circuits may enhance the application of specific components, such as pumps, motors, accumulators, filters, and airline lubricators.

The circuits appearing on the following pages are provided as a resource of general ideas. They may be used as:

- an educational resource to aid understanding of circuits already in use
- a starting point for new designs, and
- as a modification to enhance operation of existing equipment.

They certainly do not have to be implemented as shown. In fact, many of the circuits use purely mechanical components, so incorporating them into new or retrofit applications may involve integrating electronic feedback and control into the circuit as a modern alternative to mechanical control. However, many existing and new applications still gain the greatest benefit from mechanical control — especially those applications where electricity could pose a threat to health and safety.

However, whether using mechanical control or electronic, perhaps the greatest benefit may be gained by customizing one of these circuits to serve the specific requirements of an application.

Basic circuits contents

Accumulator circuits

Accumulators store fluid energy and are used to reduce pump capacity requirements, speed operation, reduce pressure surges, and as standby power sources.

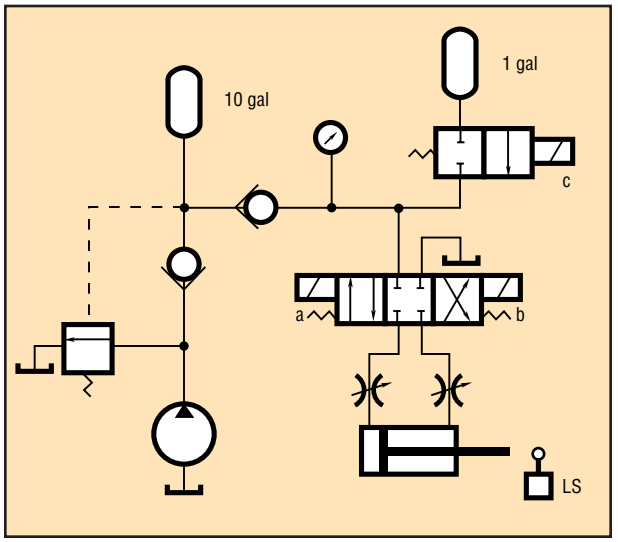

◀ Traverse and clamp

This arrangement of a large and small accumulator acts similar to a hi-lo circuit for rapid traverse and clamp. Fluid from the large accumulator combines with pump output to extend the cylinder rapidly. Fully extending the cylinder trips the limit switch to actuate solenoid (*c*). The small accumulator then maintains high clamping pressure on the cylinder for a timed period, during which the pump recharges the large accumulator. Any fluid lost by the small accumulator will also be replaced during this time.

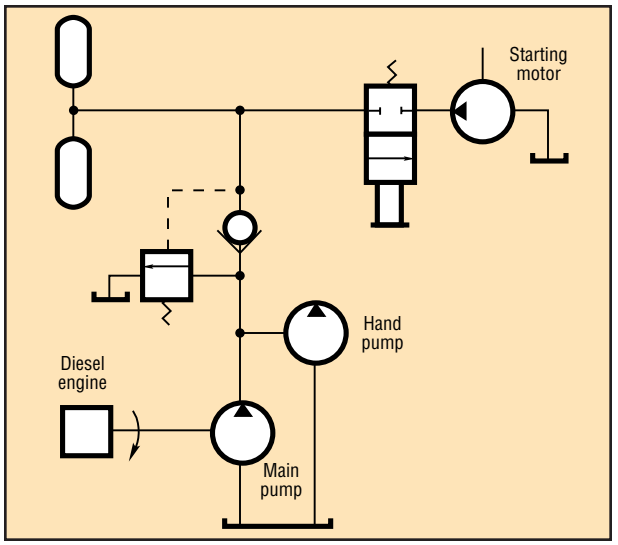

▲ Standby power source

In this diesel engine starting circuit, maximum power is required only for a short period, and time between operations is long. Power for starting the engine is stored in the accumulators. During operation of the engine, the main pump charges the accumulators to the pressure setting of the unloading valve. The pump is then unloaded for the remainder of engine running time. For starting, the manual valve is opened, connecting the combined output from the accumulators to drive the fluid motor. The hand pump serves as a means of recharging the accumulators in case of leakage over a long period of inactivity.

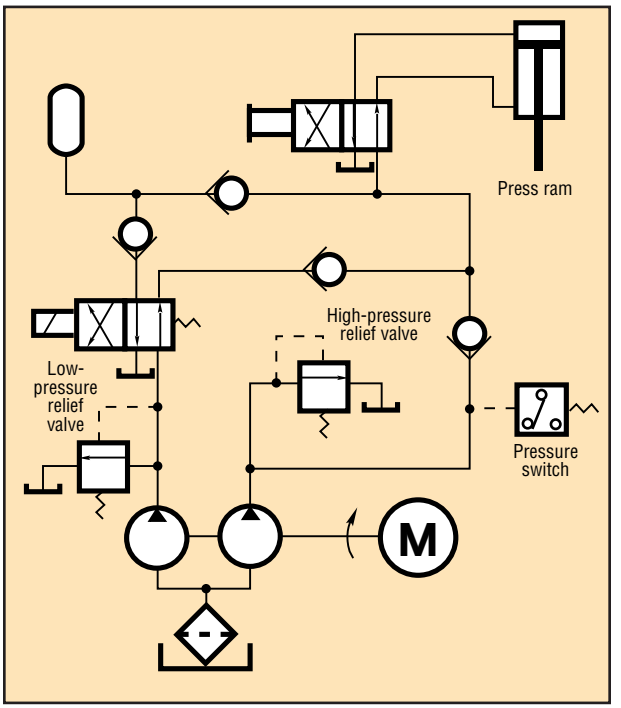

▲ Reduced pump capacity

Frequently, pumps can be downsized if the circuit uses an accumulator. The accumulator volume adds to that of both pumps to speed downward travel of the press ram. When the ram meets sufficient resistance, the pressure switch is actuated, shifting the solenoid valve. This directs fluid from the large pump to recharge the accumulator, while the small pump continues to supply high-pressure fluid to the ram. When the manually operated, 4-way valve is shifted for the return stroke, pressure is relieved, the solenoid valve is de-energized, and both pumps and the accumulator deliver fluid for rapid return.

BASIC CIRCUITS

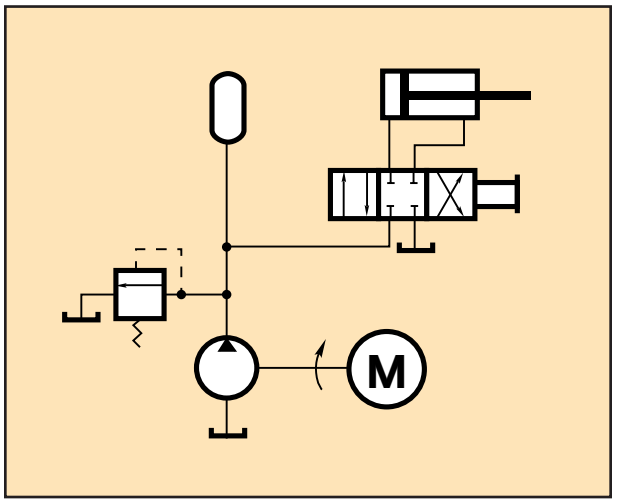

▲ Surge reduction

Operating the 4-way, closed-center valve in this circuit can cause the formation of shock pressures several times the value of the maximum pressure setting on the relief valve. Because the relief valve cannot act fast enough to drain off fluid, the high pressures can be dangerous to personnel and equipment. The accumulator in this circuit absorbs the surge pressures generated when the valve is placed in the neutral position.

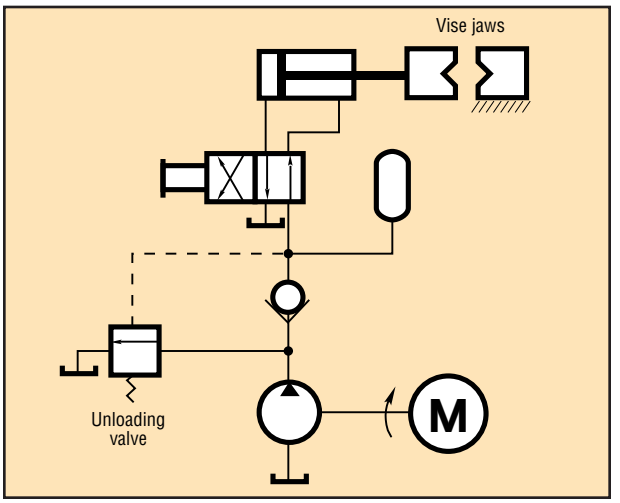

▲ Clamping

Holding pressure, leakage compensation, and power savings are obtained by using the accumulator in this vise circuit. While the vise jaws are in the clamp position, pressure is held by the accumulator, and pump output is unloaded at low pressure. The accumulator compensates for any leakage past the piston seals in the cylinder. When clamping pressure drops below the setting of the unloading valve, the valve closes, and the pump recharges the accumulator.

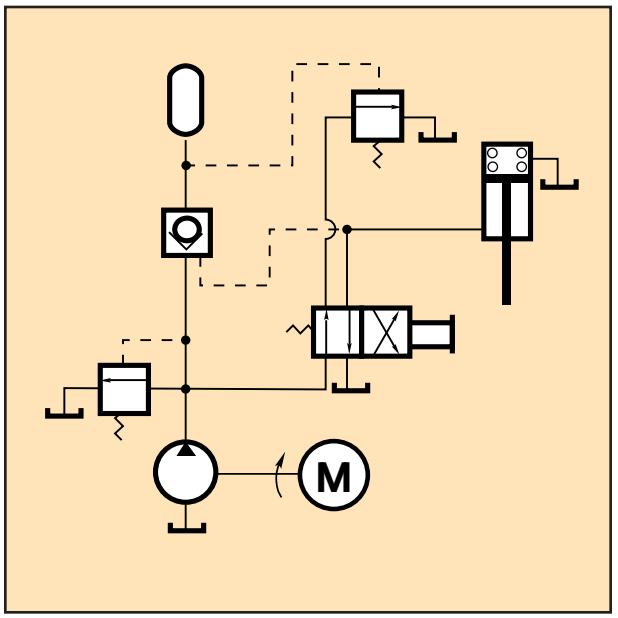

▲ Increased speed

Using a pilot-operated check valve allows adding fluid from the accumulator to pump output at the proper time within a cycle. Operating the manual valve directs fluid to retract the cylinder, exerting a pulling force. When pressure increases, the check valve opens, connecting the accumulator to the cylinder for fast action. Releasing the manual valve allows the pump to recharge the accumulator to the pressure setting of the unloading valve.

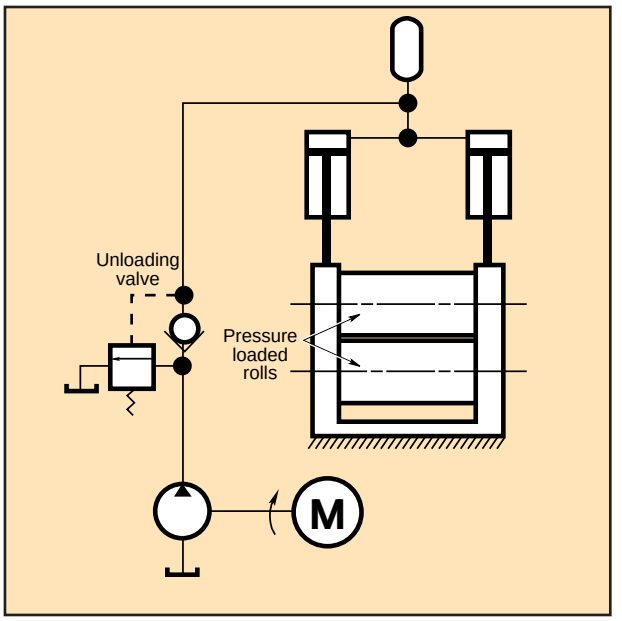

▲ Safety device

These mill rolls are loaded by hydraulic pressure. Using an accumulator allows running the pump unloaded most of the time, which saves power. The accumulator also protects the rolls from damage if a large piece of foreign matter enters the mill by absorbing fluid displaced when the roll rises. This fluid returns to the circuit when the foreign matter has passed through.

Air lubrication circuits

Valves, cylinders, and air motors can be lubricated by injecting oil into the air stream powering them. Properly locating the lubricator in the circuit is important to ensure proper lubrication.

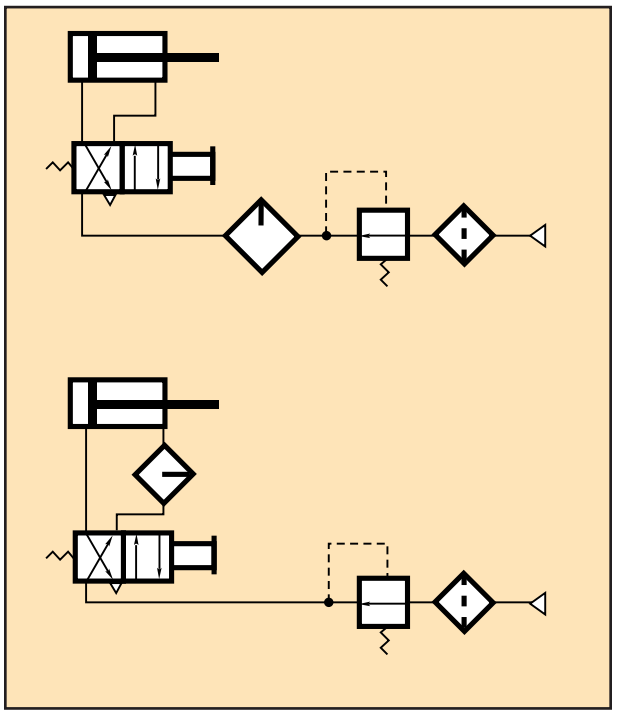

▼ **Lubricating short-stroke cylinders**

In this circuit, the lubricator bypasses the control valve and lubricates the cylinder while its rod retracts. When the rod extends, exhaust air from the head end lubricates the control valve.

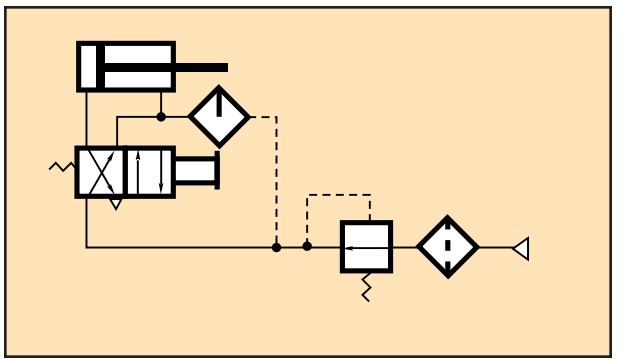

For more information

For more information on airline lubrication, see pages A/37-39 in this handbook.

◀ **Oil injection**

In the upper circuit, oil is injected into the head end of the cylinder each time the control valve cycles. In the bottom circuit, oil is injected into the cylinder through a small tube inside the air line.

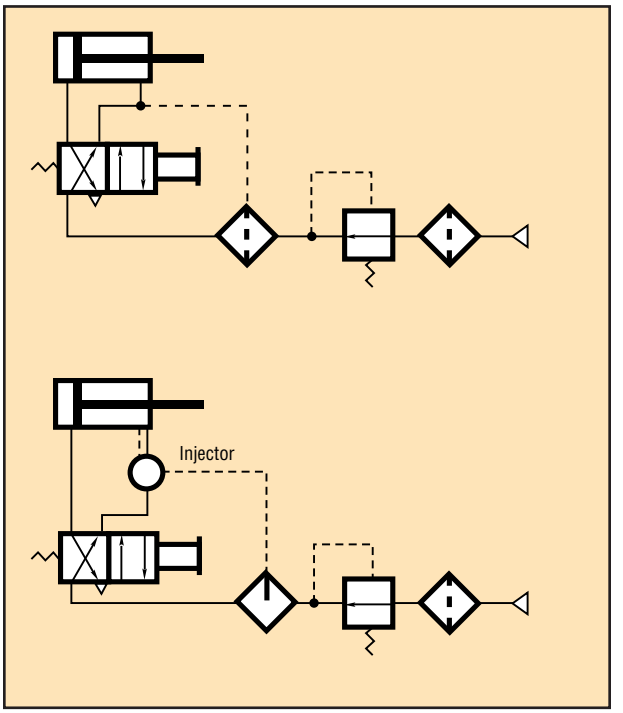

▲ **Downstream lubrication**

The upper drawing shows a conventional circuit: the lubricator mounts ahead of the control valve. In the lower drawing, air flow through the directional valve lubricates the cylinder. The valve is lubricated when the cylinder exhausts.

Hydraulic filter circuits

High-performance circuits require clean fluids. Filters may be installed in pressure lines, return-to-tank lines, or bleed-off lines.

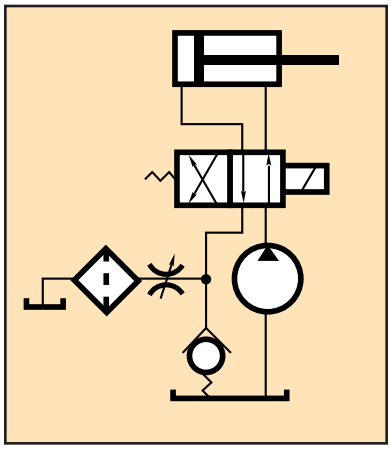

▲ Return line bypass filter
A backpressure check valve forces fluid through an orifice to the filter. The only limitation here is that the backpressure must not interfere with circuit operation.

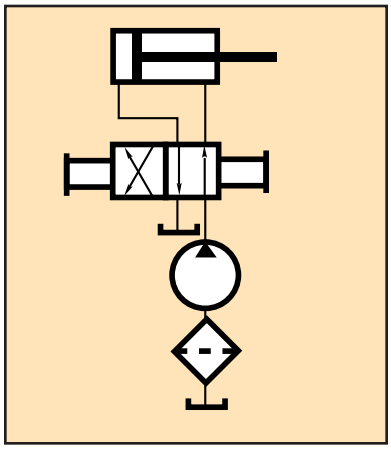

▲ Suction line strainer or filter
To prevent pump cavitation, components in this system must have low pressure drop and high capacity. Filter elements should be submerged in reservoirs so no part of the filter surface is exposed to air.

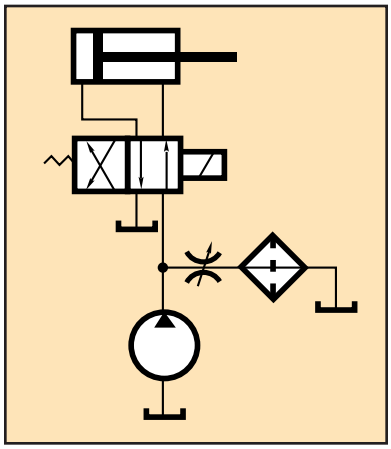

▲ Pressure line bleed-off filter
An orifice between the pump discharge and filter assembly maintains a constant flow through the filter. This circuit generally is used on high-flow circuits because flow through the filter is lost as effective pump output.

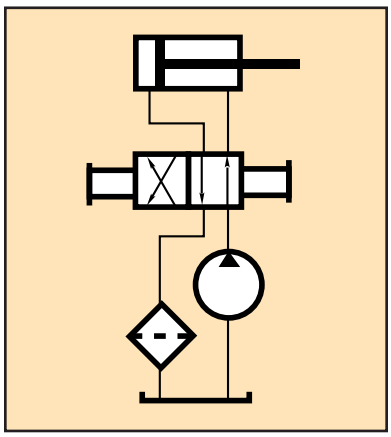

▲ Discharge line filter
An advantage of this circuit is that it filters oil immediately as it returns from the work station. Return line filters can tolerate a higher pressure drop than those in a suction line.

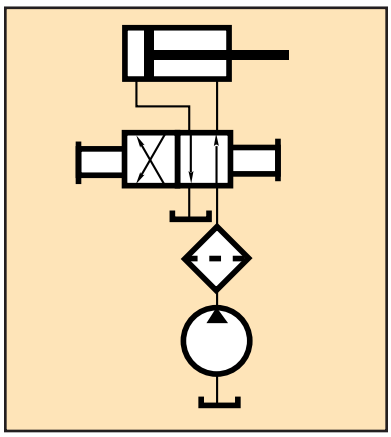

▲ Pressure line filter
This circuit has the advantage of full-flow filtration but the disadvantage of high pressure drop. Often it can be used instead of a low-pressure return line filter to prevent building up backpressure.

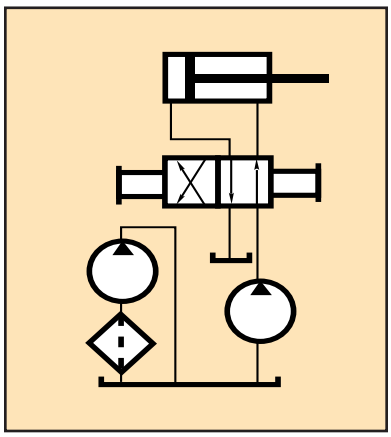

▲ Independent circuit
Sometimes called a kidney loop, this circuit filters full flow from a separate filter pump. These circuits often incorporate a heat exchanger and multiple filters.

Hydraulic motor circuits

Hydraulic pressure regulation controls motor torque, while flow regulation controls speed. Using a variable-displacement motor provides constant horsepower.

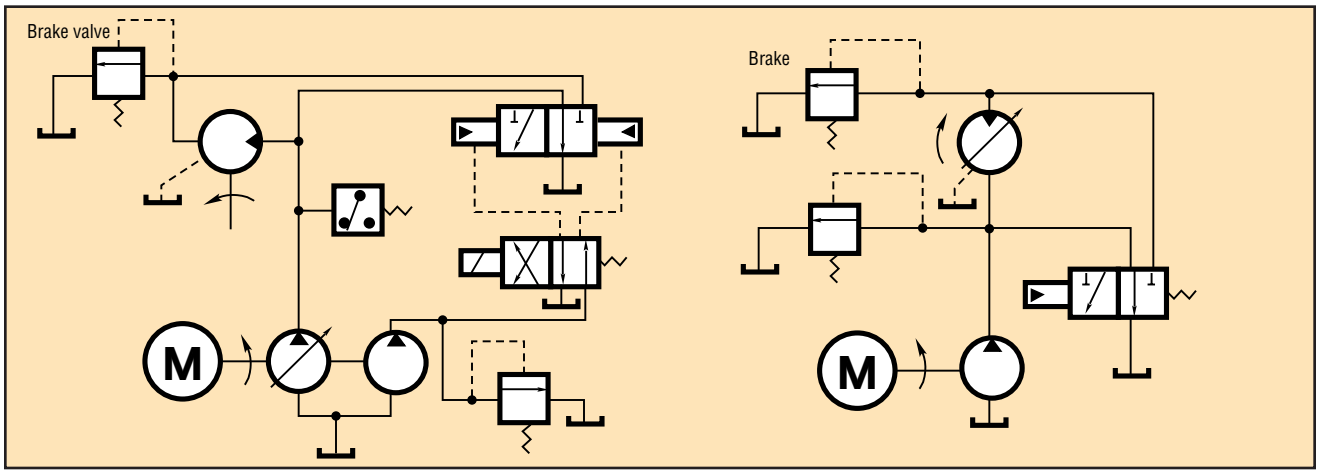

▲ Constant torque & constant power

Driving a fixed-displacement fluid motor at constant pressure produces a constant torque drive, left-hand drawing. Used with a variable-volume pump to vary flow, the horsepower output of the motor varies with speed. If the load becomes excessive, pressure rises to actuate the pressure switch, de-energizing the solenoid valve — pump unloads, fluid motor stops.

In the right-hand drawing, a fixed-displacement pump supplying a variable-displacement motor at constant pressure produces a constant-horsepower drive. The motor produces lowest speed and highest torque when displacement is maximum. Highest speed and lowest torque are produced when the displacement is minimum.

▼ Braking

When pump delivery is cut off from a motor, it continues rotating because of its inertia and that of the connected load. The motor then acts as a pump, and a source of fluid must be available to prevent it from cavitating. In (a) the manual valve allows coasting to a stop and braked stop, as well as the normal driving condition of the motor. With the valve spool up, the pump output drives the fluid motor. With the spool centered, pump output and both sides of the fluid motor are connected to tank, so that the motor coasts to a stop. With the valve spool down, the pump is unloaded and the motor, acting as a pump, forces fluid through the relief valve, which brakes it to a stop. Circuit (b) shows a brake valve that is a modified sequence valve. It supplies braking force as well as control of a negative work load. Under normal conditions, system pressure holds the brake valve open for free discharge from the motor. A negative load reduces pressure at the motor inlet, and the brake valve closes to throttle motor discharge and create a backpressure. To stop the motor, the 4-way valve is shifted to neutral.

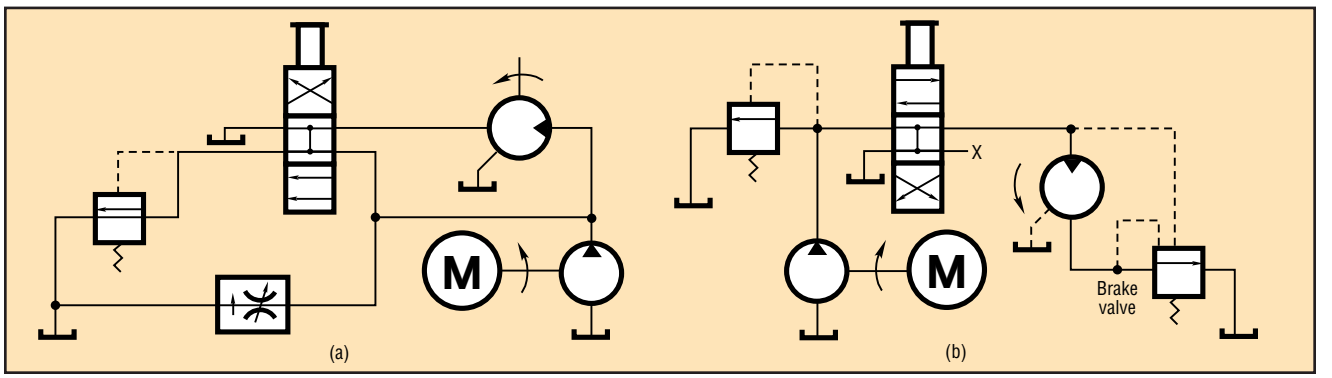

BASIC CIRCUITS

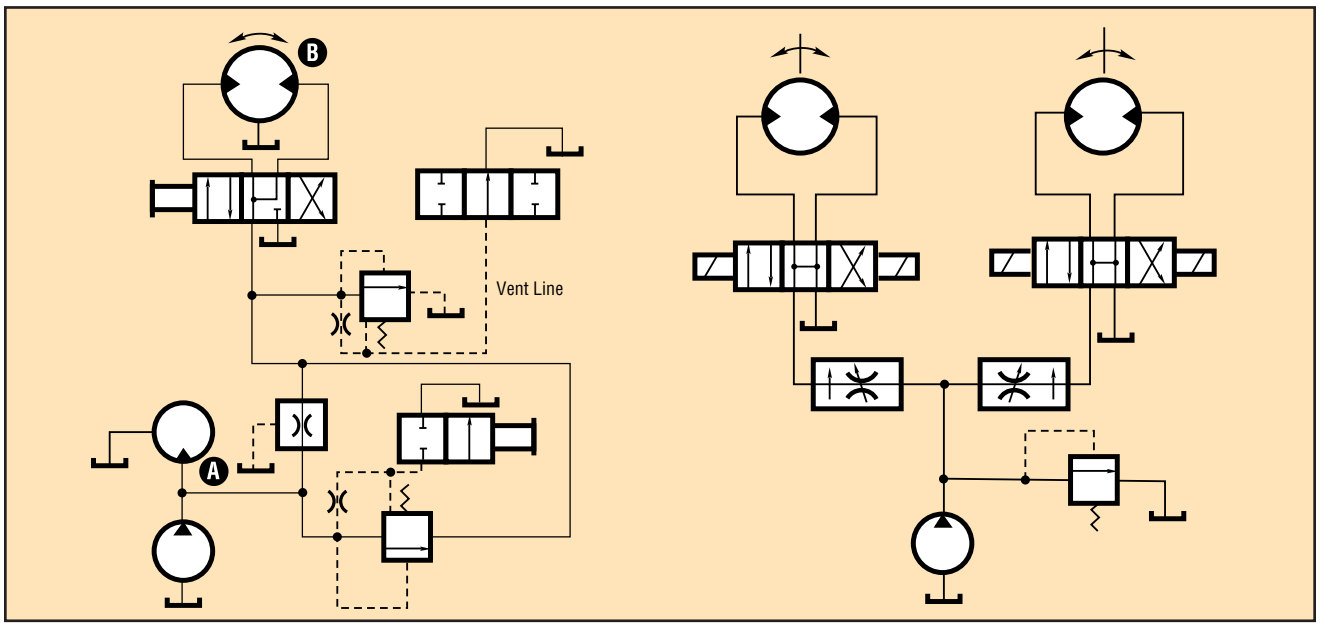

▲ Series connection

Connecting two fluid motors in series minimizes pump size and eliminates the need for a flow divider. Line sizes are also smaller than in a comparable parallel circuit, and piping is usually simpler, with only one pressure line and one return line required. Maximum torque at each motor is adjustable with the relief valves. The speed of motor *A* is controlled by the bleed-off flow control valve. Direction of motor *B* is controlled by the 4-way valve, which has an integral 2-way valve, which vents the relief valve when the motor is stopped. Total system pressure is then available at motor *A*.

▲ Parallel connection

Pump pressure can be lower in a parallel circuit because in a series circuit the pressure at the pump must be the sum of the pressure drops across the motors. However, where motor pressures vary widely, there is a loss of efficiency in supplying the motors requiring lower pressures. This circuit is most efficient where the load on each motor is the same. Raising the pressure on one motor renders the others less efficient and may disrupt the speed relationship. In parallel circuits, the only way to increase torque of the highest-pressure motor is to increase system pressure.

▼ Replenishing

When a fluid motor and pump are connected in a closed circuit, make-up fluid to compensate for the leakage must be supplied through replenishing valves. These valves also supply fluid to the motor during braking. In the left-hand circuit, a non-reversing variable volume pump is used and control of fluid motor direction is by the 4-way valve. The fixed displacement pump provides supercharge pressure. The network of check and relief valves provides for replenishing and braking in either direction. Braking pressure in each direction can be set independently on the two brake valves. In the right-hand circuit, a reversing pump is used. Although the replenishing network is simpler, brake pressure must be the same in both directions.

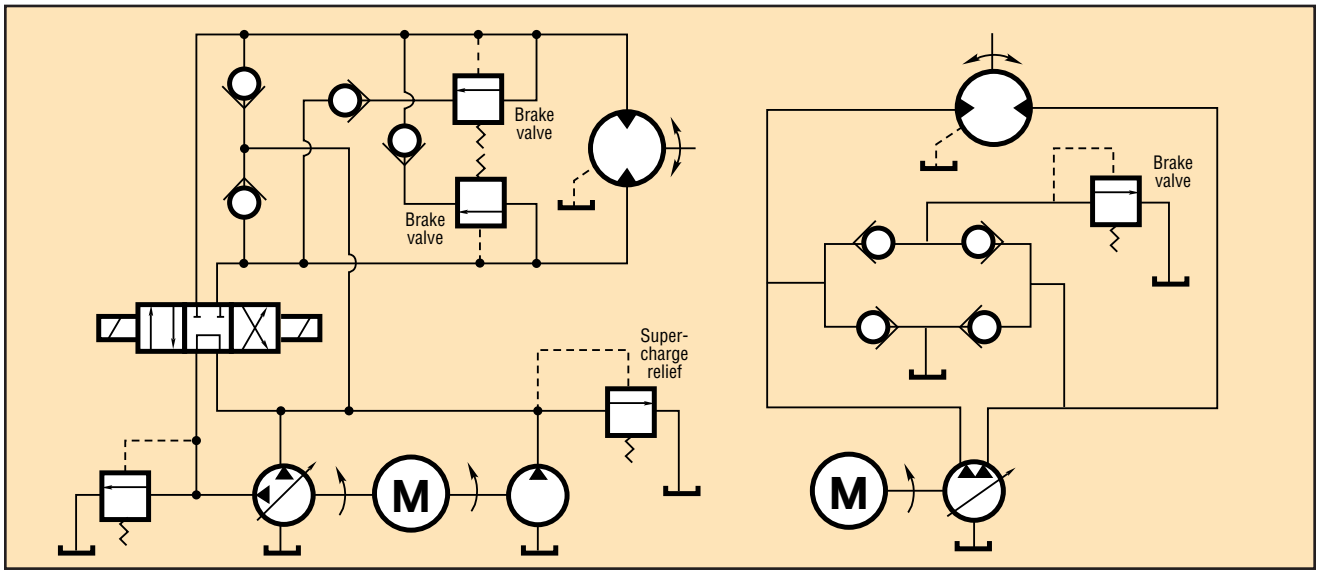

Pressure-control circuits

Controlling pressure controls the output force of cylinders or the output torque of fluid motors or rotary actuators.

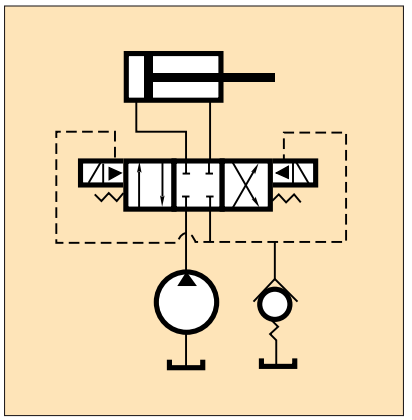

◀ Pilot pressure

When open- or tandem-center valves are used in circuits requiring pilot pressure to shift the valves, there must be a means of maintaining pressure when the valves are in neutral. One method is to install a backpressure check valve in the tank line. The check valve maintains a backpressure of, say, 50 psi.

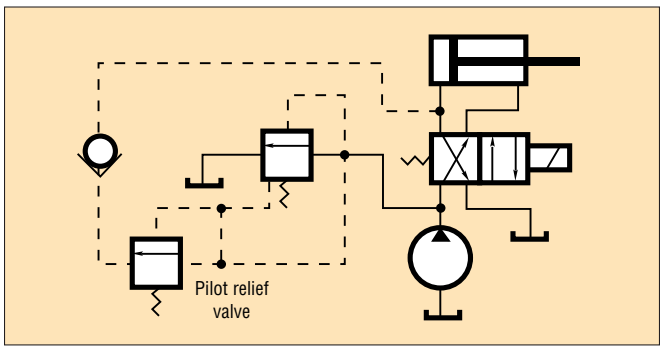

▲ Low-pressure retraction

Energizing the solenoid extends the cylinder at a maximum pressure corresponding to the main system relief valve setting. De-energizing the solenoid valve retracts the cylinder and holds it retracted at the reduced pressure setting of the pilot relief valve. The check valve prevents the pilot relief valve from operating during cylinder extension.

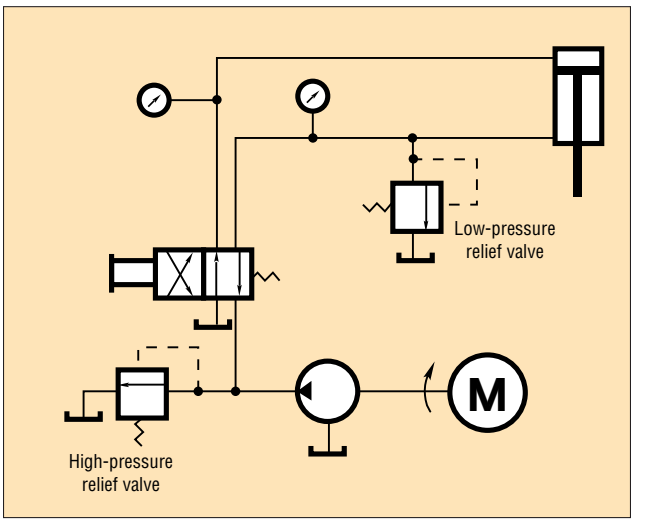

▲ Two relief valves

Using two relief valves in this circuit gives two working pressures. On the up stroke of the cylinder, the low-pressure relief valve limits system pressure. During the down stroke, the high-pressure valve limits maximum press tonnage for doing work. Using the low-pressure relief on the up stroke saves power by supporting the cylinder with low-pressure fluid.

See pages A/172-A175 for information on operation of pressure-control valves.

BASIC CIRCUITS

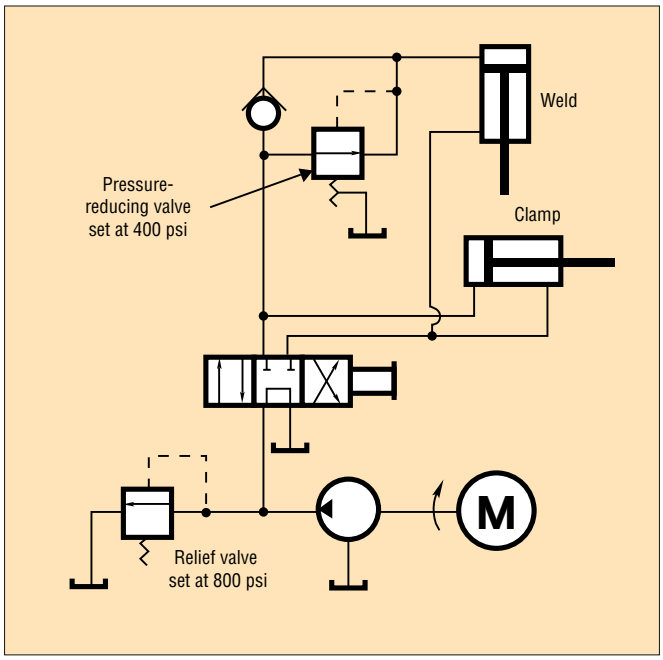

◀ Reduced pressure

In a system with only one pump, reduced pressure for one branch of the circuit can be obtained with a pressure-reducing valve. This circuit is typical for a welder, which requires high clamping force to be set by the relief valve and reduced force on the welding gun to be set by the pressure-reducing valve. Placing the check valve in parallel with the pressure-reducing valve allows free return flow when the weld cylinder retracts.

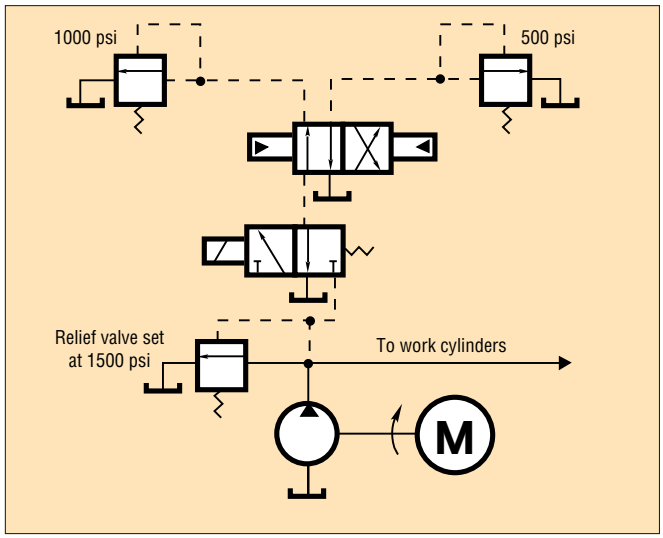

▲ Remote control

Regulating pump pressure from a remote station can be accomplished by using small, pilot relief valves connected to the system's main pilot-operated relief valve. With the 3-way solenoid valve de-energized, system pressure is limited to 1500 psi in this circuit. Energizing the 3-way solenoid valve permits venting the relief valve to either 1000 psi or 500 psi, depending on the position of the 4-way valve, which is determined by the pilot signal it receives.

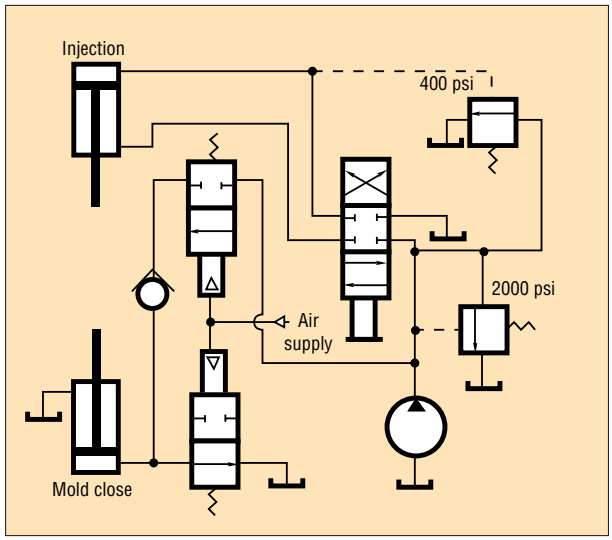

▲ Two pressures

Pilot-operated relief valves provide two pressures for the mold-close cylinder and the injection cylinder of this plastic molding machine circuit. With the manual valve in neutral, the air-operated valves are actuated to extend the mold-close cylinder at a maximum pressure of 2000 psi. Operating the manual valve to extend the injection cylinder vents the 400-psi relief to tank and vents the 2000-psi relief at 400 psi. High-pressure fluid is held by the check valve.

Pump unloading circuits

When no flow is required in a hydraulic system, pump output can be returned to tank at low pressure instead of dumping high-pressure fluid over a relief valve.

▶ Hi-lo circuit

Many systems require a high volume at low pressure for rapid traverse of a vise or tool, and then low volume, high pressure for clamping or feeding. This can be accomplished by a hi-lo circuit using two pumps. During rapid traverse, both pumps supply the system. When pressure rises during clamping or feed, the large-volume main pump unloads, and the small pump maintains pressure. Output flow of the small pump is low enough to prevent appreciable heating of the oil. Instead of pilot operation, the unloading valve can be solenoid controlled and actuated by a pressure switch.

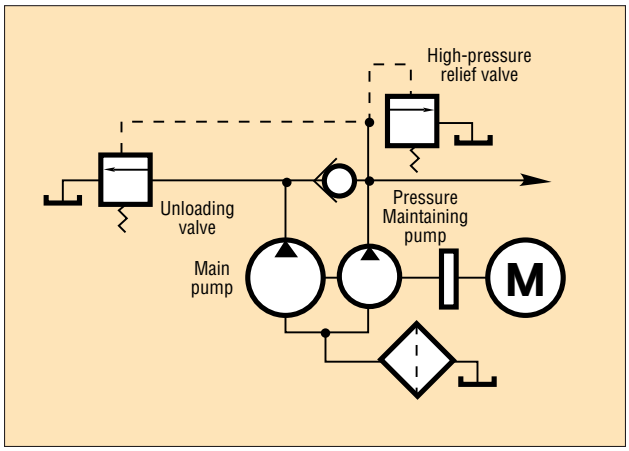

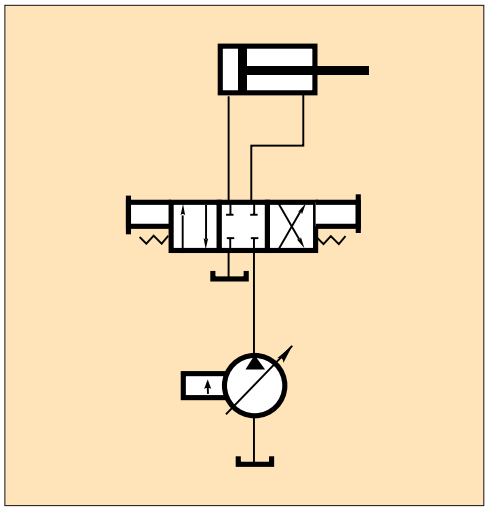

▲ Pressure-compensated pump

A pressure-compensated, variable-volume pump is controlled by system pressure. As pressure increases, displacement of the pump decreases so that pump output at the preset pressure is only sufficient to make up for leakage. Used with a closed-center valve, the pump is stroked to minimum (zero) displacement when the valve is centered.

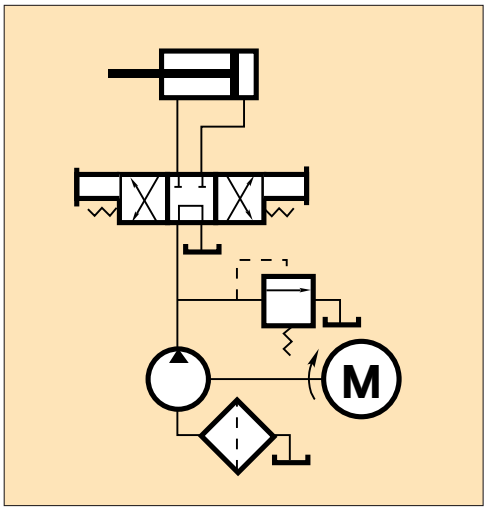

▲ Open-center system

When the open-center system is in neutral, pump output flows through the directional control valve to tank. When this simple circuit handles only low flows and the directional valve spool has tapered lands, it proves to be very efficient. If several cylinders are used, the valve can be connected in series — that is, the tank port of one valve is connected to the pressure port of the next.

Regenerative circuits

If applications require high force for only part of a cylinder's stroke, regenerative circuits provide reduced-force actuation with the advantage of faster speed, which reduces over-all cycle times.

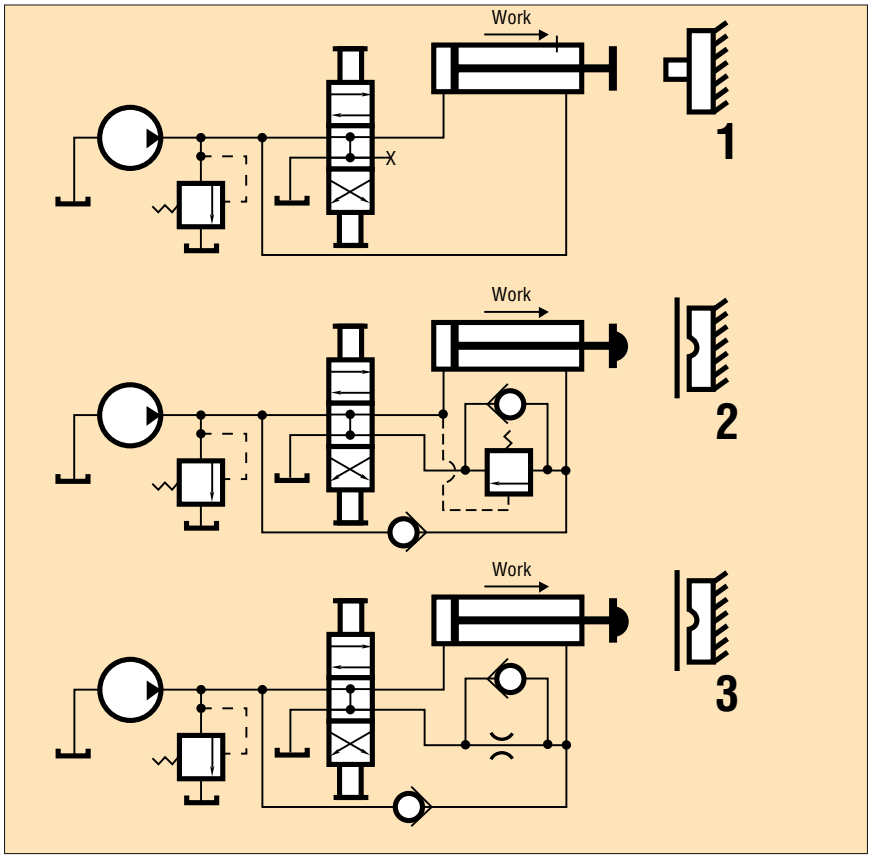

◀ Circuit 1

Rapid rod extension can be achieved by returning the flow of oil from a cylinder's head end back into its cap end. With no load, pressure in both head and cap ends is equal, so when the load is encountered, available working force depends on the differential area.

◀ Circuit 2

Combining the rapid extension of Circuit 1 with full force in response to an applied load takes full advantage of a regenerative circuit. The circuit shown produces a rapid approach stroke of the piston rod. When the rod encounters resistance (workpiece load), pressure rises on the cap end to open the sequence valve and allow oil from the head end to flow to tank through the 4-way valve. Once this occurs, full effective force on the workpiece becomes available.

◀ Circuit 3

This circuit provides a costly means to accomplish the same end as Circuit 2. Instead of a sequence and built-in check, an orifice and check are used. There is some backpressure remaining in the cylinder's head end because of the orifice resistance during final squeeze. But with the cylinder extended, no fluid flows across the orifice, so total available force acts on the cap end. Whether or not this circuit is appropriate for a given application depends on working force requirements.

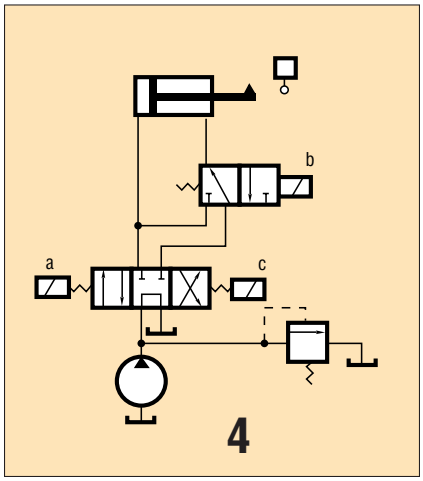

◀ Circuit 4

When electrical control is desired, a limit or proximity switch can be used to activate and de-activate a regenerative circuit. In the circuit shown, energizing solenoids *a* and *b* extends the cylinder in a differential circuit. The limit switch de-energizes solenoid *b*, directing cylinder discharge fluid to tank.

Sequencing circuits

Electrical, mechanical, and pressure signals can sequence operation of fluid power circuits. In some automatic sequencing systems these methods are combined.

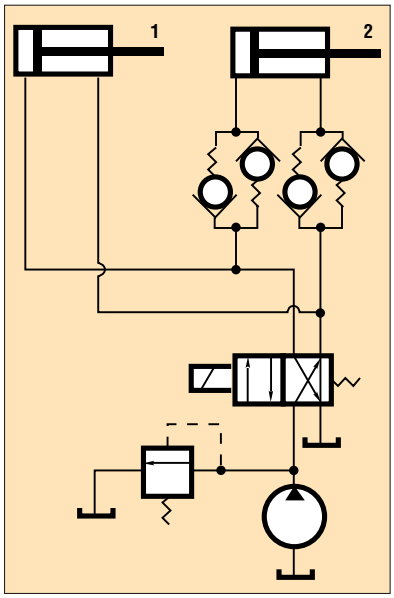

◀ Backpressure check valves

Cylinders may be sequenced by restricting flow to one cylinder. One method of restricting flow is with backpressure check valves. They prevent flow until a set pressure is reached. In this circuit, cylinder 1 extends and retracts ahead of cylinder 2.

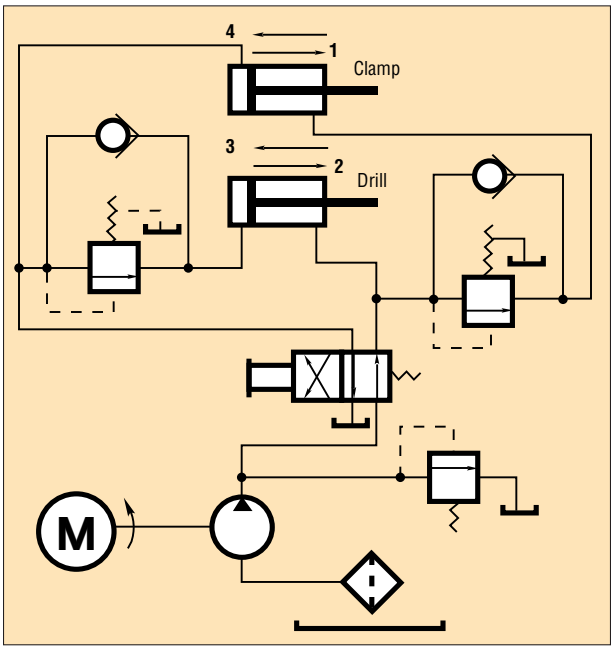

▲ Sequence valves

Several cylinders can be connected to move in sequence on forward and return strokes. In this circuit, a clamp must close before a drill descends. On the return stroke, the drill must pull out of the work before the clamp opens. The sequence valves are arranged to cause pressure buildup when one cylinder completes its stroke, the valve opens to allow flow to the other cylinder.

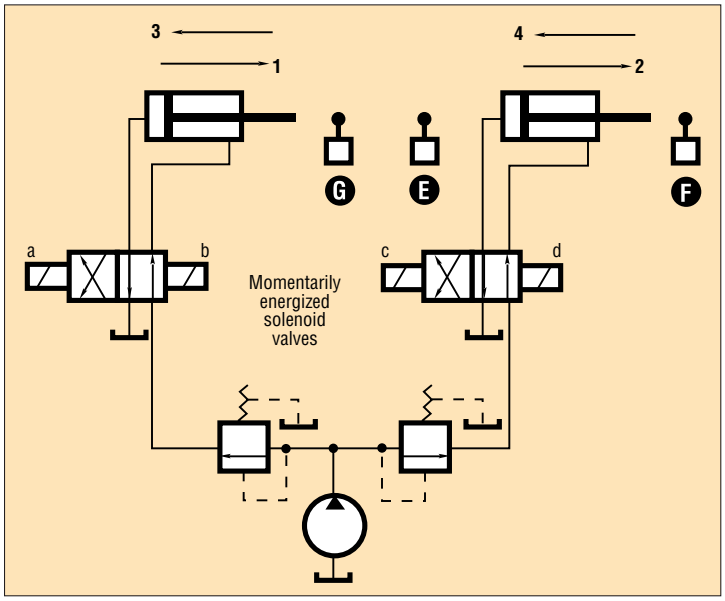

◀ Electrical control

Limit switches momentarily actuated by the cylinders control the solenoid valves to sequence this circuit. Solenoid a is energized by a pushbutton to initiate movement 1. At the completion of movement 1, limit switch E is actuated to energize solenoid c, initiating movement 2. At the end of movement 2, limit switch F is actuated to energize solenoid b, initiating movement 3. At the end of this movement, limit switch G is actuated to energize solenoid d, initiating movement 4. The sequence valves prevent a pressure drop in either cylinder while the other operates.

Speed-control circuits

One of the great advantages of fluid power is the ability to control speed of a cylinder, motor, or rotary actuator. Speed is primarily a function of oil flow and size of the actuator.

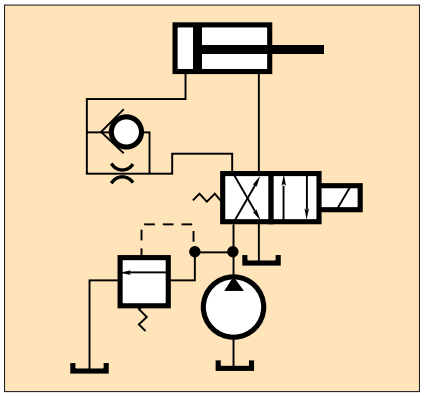

▲ Meter-in circuit

Speed control during a work stroke can be accomplished by regulating flow *to* the cylinder. The check valve allows free reverse flow when the cylinder retracts. It normally gives finer speed control than a meter-out circuit.

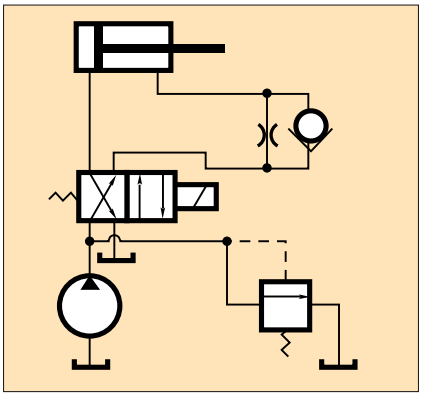

▲ Meter-out circuit

Regulating flow *from* the cylinder is another way to control speed. This circuit maintains a constant backpressure during rod extension and prevents lunging if the load drops quickly or reverses.

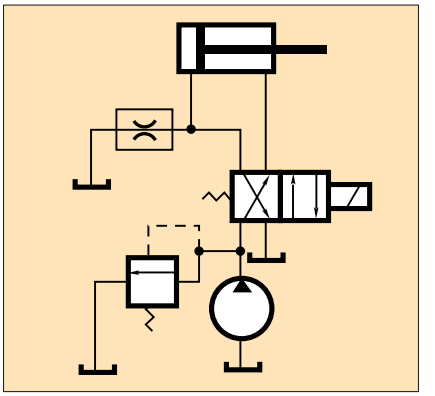

▲ Bleed-off circuit

Flow to the cylinder is regulated by metering part of the pump flow to tank. This circuit is more efficient than meter-in or meter-out, as pump output is only high enough to overcome resistance. However, it does not compensate for pump slip.

▶ Variable feed

Many machines require intermittent fast and slow feed during their cycles. This can be accomplished by having a cam-operated 2-way valve in parallel with a meter-out flow control valve. Rapid forward movement takes place any time the 2-way valve is open. Closing off the valve slows down cylinder speed. Properly positioning the cams obtains the required speeds in sequence. The check valve in parallel with the flow control permits free return flow, allowing the cylinder rod to return rapidly.

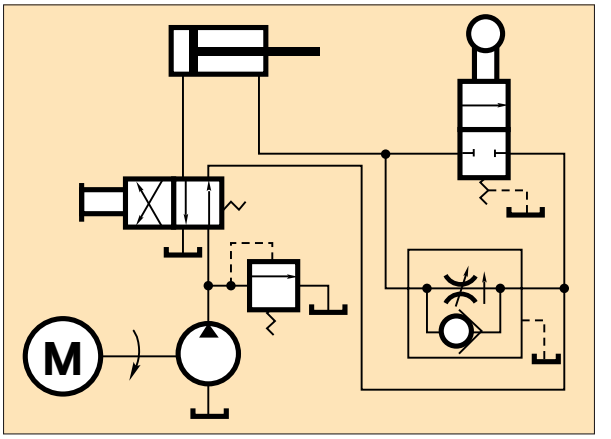

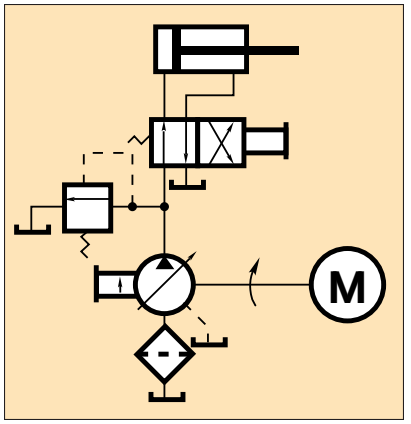

◀ Variable-volume pump

Pump flow can be controlled by various means such as manual, electric motor, hydraulic, or mechanical. How closely flow output actually matches command depends, in part, on slip, which increases with load. With a pressure-compensated, variable-volume pump, output flow decreases with the increasing pressure. This type of pump can be used for traverse and clamp operations. An external relief valve is usually unnecessary when a pressure-compensated pump is used. For details on the different types of pumps, their operation, and how they vary flow, refer to the pumps section of this Handbook.

Synchronizing circuits

Theoretically, two cylinders will move together when flow to each is the same. Variations in leakage, friction, and cylinder size cause them to get out of step.

▶ Replenishing

One of the considerations in synchronizing cylinders is leakage replacement. Under normal pressure, leakage can be practically zero over one stroke. Accumulated error is the main concern. A replenishing circuit, which replaces leakage after each cylinder stroke, eliminates this trend. In the circuit, the cylinders are connected in series and controlled by the 4-way manual valve. The cylinders actuate limit switches, which control valves *A* and *B*. On the return stroke, if cylinder 1 bottoms first, valve *A* is actuated to open valve *C*, permitting excess fluid from cylinder 2 to flow to tank. If cylinder 2's piston returns first, valve *B* is actuated to direct fluid to retract cylinder 1.

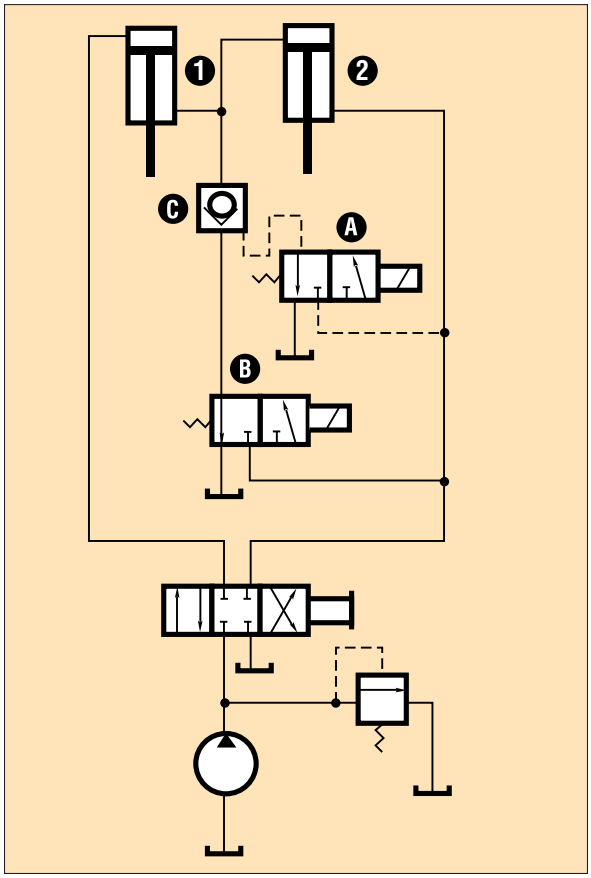

▼Fluid motor flow divider

An effective flow divider can be made up of two fluid motors of the same size coupled together. Both motors must rotate at the same speed and, therefore, deliver equal volumes of fluid. Variations in load or friction do not greatly affect synchronization, but motor slip is a factor.

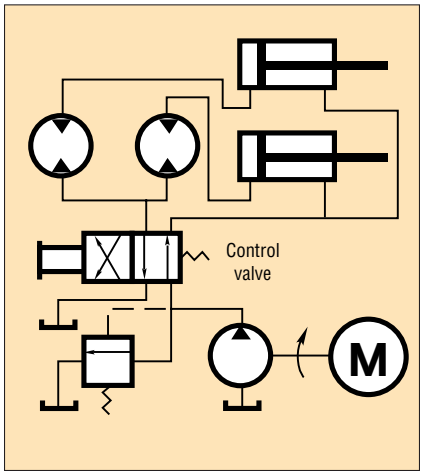

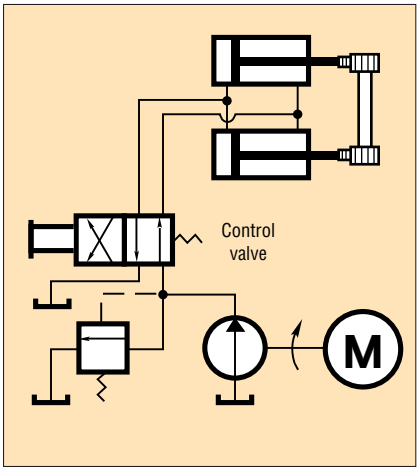

◀ Rack and pinion

Mechanically tying two cylinders together by installing a rack on each piston rod and fastening the pinions to a single shaft works well when the linkage is rigid and the mesh is proper. A chain and sprocket arrangement can be used if synchronized motion is required in only one direction.